Europäisches Patentamt
European Patent Office
Office européen des brevets

EUROPÄISCHES PATENT | EUROPEAN PATENT BREVET EUROPÉEN

Hiermit wird bescheinigt, dass für die in der Patentschrift beschriebene Erfindung ein europäisches Patent für die in der Patentschrift bezeichneten Vertragsstaaten erteilt worden ist.

It is hereby certified that a European patent has been granted in respect of the invention described in the patent specification for the Contracting States designated in the specification.

Il est certifié par la présente qu'un brevet européen a été délivré pour l'invention décrite dans le fascicule de brevet, pour les États contractants désignés dans le fascicule.

Europäisches Patent Nr.
European patent No.
Brevet européen n°

EP3777522

Tag der Bekanntmachung des Hinweises auf die Erteilung des europäischen Patents
Date of publication of the mention of the grant of the European patent
Date de la publication de la mention de la délivrance du brevet européen

03.04.2024

INSTALLATION CÔTIÈRE DE GESTION DE PHÉNOMÈNES MÉTÉOROLOGIQUES

Patentinhaber | Proprietor(s) of the patent | Titulaire(s) du brevet

Piufortavi
17 rue Albany
Juan les Pins
06160 Antibes
FR

António Campinos

Präsident des Europäischen Patentamts | President of the European Patent Office | Président de l'Office européen des brevets

München, den | Munich, | Munich, le **03.04.2024**

URKUNDE | CERTIFICATE | CERTIFICAT

EPA/EPO/OEB 2031 10.22

Europäisches Patentamt
European Patent Office
Office européen des brevets

Office européen des brevets
80298 MUNICH
ALLEMAGNE

Des questions sur cette notification?
Contactez notre Service clientèle sur www.epo.org/contact

AtlantIP International
39, rue du Galvaire de Grillaud
44100 Nantes
FRANCE

Date	07.03.2024

Référence	Demande n°. / Brevet N°.
PIUB001EP	20190607.0 - 1005 / 3777522
Demandeur / Titulaire	
Piufortavi	

Décision relative à la délivrance d'un brevet européen en application de l'article 97(1) CBE

La demande de brevet européen No. 20190607.0 ayant été dûment examinée, il est procédé, pour l'ensemble des Etats contractants désignés, à la délivrance d'un brevet européen ayant pour titre celui qui figure dans la notification émise en application de la règle 71(3) CBE (OEB Form 2004C) ou dans les informations (OEB Form 2004W, cf. Communiqué de l'OEB en date du 8 Juin 2015, JO OEB 2015, A52) en date du 15.11.23 et dans la version conforme aux documents indiqués dans cette notification/information.

No de brevet	: 3777522
Date de dépôt	: 12.08.20
Priorité revendiquée	: 12.08.19/FRA 1909171
Les Etats contractants et le(s) Titulaire(s) du brevet	: AL AT BE BG CH CY CZ DE DK EE ES FI FR GB GR HR HU IE IS IT LI LT LU LV MC MK MT NL NO PL PT RO RS SE SI SK SM TR Piufortavi 17 rue Albany Juan les Pins 06160 Antibes/FR

La décision prend effet au jour de la publication au Bulletin européen des brevets de la mention de la délivrance (art. 97(3) CBE).

La mention de la délivrance sera publiée au Bulletin européen des Brevets No 24/14 du 03.04.24.

Division d'examen

Crespo Vallejo, Daci Garmendia Irizar, Ai Urbahn, Stephanie

Europäisches Patentamt · European Patent Office · Office européen des brevets

Lettre recommandée
OEB Form 2006A 05.23 (29/02/24)

au courrier interne: 01.03.24

Remarque relative à la décision de délivrance d'un brevet européen (formulaire OEB 2006)

Depuis le 1er juin 2023, date d'application des règlements (UE) n° 1257/2012 et n° 1260/2012, plusieurs options s'offrent aux titulaires de brevets européens pour la validation d'un brevet européen.

1. Validations nationales "classiques" dans les États parties à la CBE

Les procédures exactes et les exigences en matière de traduction pour la validation diffèrent en fonction des États parties à la CBE. La brochure d'information intitulée **"Droit national relatif à la CBE"** fournit des renseignements utiles sur les conditions de forme à remplir et sur les actes à accomplir auprès des offices de brevets de ces États aux fins d'obtenir des droits dans ces derniers.

Certains États parties à la CBE exigent une **traduction du fascicule du brevet européen**. Selon que l'État visé est ou non partie à l'accord de Londres, la traduction à fournir doit porter soit uniquement sur les revendications, soit sur la totalité du brevet. Si la ou les traductions ne sont pas produites, le brevet européen peut être dès l'origine réputé sans effet dans les États concernés.

Des **taxes annuelles "nationales"** peuvent être perçues pour les années suivant celle au cours de laquelle la mention de la délivrance a été publiée au Bulletin européen des brevets. Pour plus de détails, il convient de consulter la brochure susmentionnée.

2. Brevet unitaire : validation "unitaire" centralisée auprès de l'OEB pour les États membres de l'Union européenne participant au brevet unitaire

Le brevet européen à effet unitaire (ou brevet unitaire) est un brevet européen délivré par l'OEB, auquel l'OEB, sur demande du titulaire du brevet européen, a attribué un effet unitaire. Son champ d'application territorial couvre les territoires des États membres participants dans lesquels l'AJUB produit ses effets à la date d'inscription de l'effet unitaire par l'OEB. De plus amples informations sont fournies dans la brochure **"Le guide du brevet unitaire"**, disponible sur le site Internet de l'OEB.

Afin d'obtenir un brevet unitaire, il est nécessaire de présenter **une demande d'effet unitaire auprès de l'OEB** dans la langue de la procédure, au plus tard **un mois** après la date à laquelle la mention de la délivrance a été publiée au Bulletin européen des brevets. Cette demande doit être accompagnée d'**une traduction de l'intégralité du fascicule** soit en anglais, si la langue de la procédure est le français ou l'allemand, soit dans une autre langue officielle de l'Union européenne, si la langue de la procédure est l'anglais. Pour présenter votre demande, il vous est fortement recommandé d'utiliser la fonctionnalité du formulaire 7000 spécialement prévue à cet effet dans le dépôt en ligne (eOLF) et le dépôt en ligne 2.0.

Dans certaines conditions, les petites et moyennes entreprises, les personnes physiques et certaines entités (organisations sans but lucratif, universités et organismes de recherche publics) qui ont déposé la demande de brevet correspondante dans une langue officielle de l'Union européenne autre que l'allemand, l'anglais ou le français, ont droit à une **compensation des coûts de traduction** sous forme de somme forfaitaire si elles ont leur domicile ou leur siège dans un État membre de l'Union européenne.

Une seule taxe annuelle doit être acquittée chaque année auprès de l'OEB aux fins du maintien en vigueur du brevet européen à effet unitaire.

3. Combinaison d'un brevet unitaire avec des validations nationales classiques

Le brevet unitaire ne s'applique qu'aux États membres de l'Union européenne qui sont liés par le règlement (UE) n° 1257/2012 et qui ont ratifié l'Accord relatif à une juridiction unifiée du brevet. Certains États parties à la CBE ne sont donc pas couverts par le brevet unitaire.

Par conséquent, si une protection pour ces derniers est souhaitée en plus de celle conférée par le brevet unitaire, il sera nécessaire de procéder également à des validations nationales (voir point 1 ci-dessus).

Étant donné que les actes indispensables aux différentes validations sont susceptibles d'être modifiés, il est conseillé de toujours consulter la version la plus récente des brochures citées ci-dessus, ainsi que le site Internet de l'OEB (epo.org).

I- DESCRIPTION

Title of invention: Coastal weather management system

[1] The present invention relates to systems for managing meteorological phenomena. More specifically, the present invention is a coastal installation for managing, or even preventing, the occurrence of certain meteorological phenomena.

[2] Indeed, since the 1970s and in the face of a growing awareness of ongoing global warming, studies have shown that some severe weather events, such as cyclones in the Indian Ocean, hurricanes in the northern part of the Atlantic Ocean or typhoons in the Pacific, have seen their frequency and intensity increase due to the average increase in surface water temperature. In 2017, a cyclone with winds of 350 km/h was observed.

[3] More precisely, a hurricane (or typhoon or cyclone) is a meteorological phenomenon that originates at sea, the formation and intensity of which depend in particular on the surface temperatures of ocean waters.

[4] However, studies have shown that other conditions are also necessary for the creation of a hurricane (or a cyclone...), such as:

- A humidity level above 70%, as is the case in the intertropical convergence zone, favouring the formation of cumulonimbus cloud masses.
- An absence of wind at altitude, so as not to disperse the convective clouds.
- A pressure gradient allowing the movement of moist air masses and causing a depression.

- A geographical position of the place of formation of the said hurricane distant from the equator by a few degrees of latitude, so that the value of the pseudo-Coriolis force is not zero, thus favoring the creation of a circular movement of air masses;
- A supply of warm, humid air from gas exchanges between the ocean and the atmosphere.

[5] Regarding the exchanges between the ocean and the atmosphere, it should be noted that they occur mainly in the upper (or superficial) layers of the ocean, i.e. above the thermocline (the waters under this surface mixing layer constitute the thermocline, the waters of the thermocline undergoing a very rapid decrease in temperature as a function of depth). These waters have very low temperatures and do not contribute to the creation of the meteorological phenomena in question).

[6] In fact, to promote the formation of a cyclone, it is necessary that the temperature of the surface water, i.e. at the level of the layer of water between the thermocline and the surface, be above 26°C, and this over a thickness of at least 50 meters.

[7] Thus, some areas are considered hurricane "nurseries", for example maritime areas connected to islands located far from the mainland coast. An example is the maritime area to the west of the Cape Verde archipelago, fed by very warm waters produced on the continental shelf of the islands that make up Cape Verde, the waters being brought into the hurricane formation zone by the north equatorial current and the trade winds. It should also be noted that studies have shown that 95% of North Atlantic cyclones, between 1988 and 2017, originated around the Cape Verde archipelago.

[8] Indeed, these islands have a particular arrangement that blocks the oceanic circulation of the Canary Current, a current carrying cold water from the natural upwelling of deep (and therefore cold) water to the surface, as can occur off the coasts of Morocco, Mauritania and Senegal. For example, near the Cape Verde archipelago, surface waters reach temperatures above 28°C during the summer (mainly due to solar radiation), which fuels the formation of hurricanes in the North Atlantic.

[9] Of course, the Cape Verde archipelago is given here only as an example; other islands or places, such as the Chagos Archipelago, the Comoros, the Scattered Islands in the Indian Ocean, and the Mariana Archipelago in the North Pacific, also meet these criteria and are therefore likely to be places where destructive weather events occur.

[10] We therefore stress the urgency of finding a solution to reduce, or even prevent, the formation of such meteorological phenomena, or at least limit their intensity, as this type of phenomenon causes human losses and material damage sometimes amounting to several billion euros (we can think in particular of Hurricane Irma in 2017 which caused 134 deaths and material damage estimated at 67.8 billion dollars).
WO2011/011370A1 and CN101403472B disclose a coastal weather management facility.

[11] The invention is a coastal facility for managing meteorological phenomena according to claim 1, wherewith:

- Conduits starting from the said installation and extending to a depth under the mixed ocean layer (i.e. preferably at the level of the thermocline and in an area where the water has a temperature of less than 18°C);
- Pumps to pump water, such as water under the ocean mixing layer (including via these pipes) to the said facility.
- A means of dispersing the pumped water to mix this pumped water with the surface water of the ocean;
- At least one well that is connected, on the one hand, to the pumps by one or more pipes, and on the other hand, to the conduits, at least one well being filled by the conduits, with water coming from under the oceanic mixing layer by a communicating vessel effect.

[12] This system thus makes it possible to pump the water under the mixing layer, preferably with a temperature difference of at least 10°C with the surface water, in order to mix this pumped water with the surface water by means of dispersal means. This has the effect of reducing the temperature of the surface water and thus limiting the occurrence of violent weather phenomena and/or reducing their intensity.

[13] In addition, the mixture of nutrient-rich water from the depths with surface water promotes the development of flora and fauna, thus contributing to the prosperity of fisheries and aquaculture.

[14] It should also be noted that the contribution of cold water promotes the uptake of atmospheric carbon dioxide by surface ocean waters.

[15] This installation also makes it possible to fight against global warming, for example by reducing the temperature of surface waters around tropical islands of volcanic origin with a continental shelf by 2 degrees, the production of water vapor in the atmosphere (a gas that is also a greenhouse gas) is reduced. In addition, the local cooling of surface water at certain locations in the equatorial zone also leads to a reduction in the temperature of locally generated air masses. The invention therefore also has the advantage of reducing the frequency and/or intensity of heat wave episodes in non-equatorial areas (i.e. limiting the long periods during which temperatures are above seasonal norms).

[16] Depending on one possible feature, this installation includes means of power supply such as photovoltaic panels and/or wind turbines.

[17] Equipping the coastal installation with power supplies makes it energy self-sufficient. In addition, the combination of several different and complementary power supplies allows the system to operate during the day and at least part of the night, and preferably at least 20 hours a day.

[18] Another possible feature is that the facility is located on the coast or beach, and preferably near land with a continental shelf, for example by means of concrete foundations.

[19] In fact, it is less expensive to build the facility on a beach or in shallow water (near the coast) because it is easier to build a concrete foundation and thus create a more durable structure that can withstand bad weather and various natural events.

[20] In addition, this design helps to cool the air near the beach.

[21] Another possible feature is that the means of power supply are located at a certain distance from the means of dispersal and are connected to the pumps (requiring a power supply) by buried power lines.

[22] These means of supply are, for example, located at a distance of at least 5 km inland from the pumps in order to limit the corrosive effects of seawater on these elements. In addition, in the event of bad weather, it reduces the risk of breakdown and the risks associated with interventions in the context of maintenance or repairs. In addition, the organization of this supply reduces visual and noise pollution on the beach, usually at these tourist sites.

[23] Another possible feature is that these pumps are submersible and/or electric pumps.

[24] The pumps are preferably submersible electric pumps placed in the pipes at depths between 1.5 and 4 m, so as not to be sensitive to tidal phenomena.

[25] Another possible feature is that these conduits are laid on the seabed.

[26] This protects the ducts from the weather and air. In addition, these ducts are advantageously made of special seawater-resistant steels, and have a standard diameter of about 8 inches (about 20.32 cm).

[27] Another possible feature is that one of the ends of these conduits is more than 70 metres deep.

[28] Another possible feature is that the means of dispersal are water cannons.

[29] Water cannons are a low-cost, low-maintenance method of dispersing pumped water over a large area, promoting mixing between ocean surface water and pumped water.

[30] In addition, the use of water cannons causes the formation of cold water droplets in the atmosphere, which limits or even prevents exchanges between the atmosphere and the surface layer of ocean water, thus limiting the evaporation of warm surface water. In addition, these suspended droplets also limit the heating of surface waters by the sun's rays.

[31] According to another possible characteristic, those means making up that installation are regularly arranged around an island.

[32] To optimize surface water cooling, it is beneficial to have pumps and dispersal means at regular intervals around the perimeter of an island (or along a coast).

[33] Another possible feature is that the plant has concrete foundations, on which the means of dispersing the pumped water are placed.

[34] Another possible characteristic is that each of the pipes and/or means of dispersion is supplied by at least one pump.

[35] Another possible feature is that this installation includes a seawater desalination module, at least one of the pipes includes, for example, a bypass supplying this desalination module.

[36] Indeed, it is advantageous to be able to provide drinking water to the populations living around the said facility, and in particular on the islands.

[37] The invention will be better understood and other subject-matter, details, features and advantages will become clearer in the following description of particularities of the invention, given for illustrative and non-exhaustive purposes only, with reference to the attached drawings, in which:

- Figure 1 is a schematic representation in perspective from above of a non-invention installation.
- Figure 2 is a very schematic and cross-sectional view of the installation in Figure 1.
- Figure 3 is a zoomed-in view of a portion of the facility in Figure 1.
- Figure 4 is a very schematic and cross-sectional view of an installation according to the invention.

The incarnations shown in Figures 1 to 3 are not part of the invention, but represent elements of the state of the art useful for understanding the invention.

[38] For example, Figure 1 is a schematic representation of a coastal installation 1 for the management of meteorological phenomena from above.

[39] Specifically, Coastal Facility 1 is located on the edge of P Beach.

[40] As more specifically illustrated in Figure 2, Facility 1 includes:

- Conduits 5 arranged on the seabed F (i.e. on the ground), starting from said installation 1 and extending towards the ocean S.
- Pumps 7 to pump water through these pipes 5 to said installation 1.
- This means 9 to disperse the pumped water, which allows this pumped water to be mixed with the surface water.
- The power supply means 11 intended to provide power to the pumps 7.

[41] 5 ducts, for example, are corrosion-resistant steel ducts with a standardized diameter of 8 inches, identical to the ducts used in the oil industry.

[42] Specifically, Ducts 5 extend to a depth below the mixed layer or at the thermocline, i.e., in an area where ocean waters have temperatures at or below 18°C.

[43] Pumps 7, on the other hand, are preferably submersible and electric pumps arranged in these ducts 5 (at least one pump per duct). In addition, these 7 pumps are located at depths between 1.5 and 4 meters, on the one hand to prevent the pumps from defusing during the tidal range, and on the other hand, to limit the cost of installing these pumps (in fact, when the depths are too great, the installation of the pumps requires expensive specific equipment).

[44] In another variant not shown, the 7 pumps are so-called surface pumps (i.e. not submerged) placed in an equipped room at least 3 meters below sea level. This has the advantage of reducing the cost of pumps and their maintenance, in exchange for a greater investment related to the construction of dedicated underwater premises to accommodate these pumps.

[45] Dispersion means that 9, in this example, are water cannons that allow the cold water pumped from the depths of the ocean to be dispersed in an aerial manner. It should be noted that the 9 water cannons are, for example, connected to the head of pump 7 by means of a flexible tube (like a 6-inch diameter flexible tube, or about 15.24 cm), this type of connection facilitating maintenance, installation and disassembly for overhaul or replacement of the pumps.

[46] However, dispersion means that 9 can be any way to mix pumped water with surface water, such as pipes opening into the water near facility 1.

[47] The power supply means that 11, for their part, are advantageously 11a photovoltaic panels or 11b wind turbines, this power means that 11 is connected to 7 pumps to provide them with electricity. Nevertheless, this means that 11 can also supply electricity to any useful element of installation 1.

[48] It should be noted that the facility is located on the edge of the coast or beach, and preferably near (or at the edge of) land with a continental shelf. Indeed, given the function of the facility and the geographical areas in which it is to be built, it is preferable that the foundations be made of concrete, but other means of construction are possible if they have the required solidity.

[49] In addition, the free end of the 5 ducts is ideally located at a depth of at least 70 m, a depth where the water temperature is equal to or less than 18°C.

[50] Facility 1 is ideally located on an island, for example on the island of Boa Vista in the Cape Verde archipelago.

[51] As more specifically illustrated in Figure 3, Ducts 5, Pumps 7 and Dispersal Means 9 are placed at regular intervals all around the island of Boa Vista along the beach by means of concrete foundations.

[52] This power supply 11 then makes it possible to supply pumps 7 for about twenty hours a day, and thus to pump and mix water at a temperature of less than or equal to 18°C with surface water, whose average temperature is about 28°C in summer. The calculations have shown that an adequate sizing of the various means of installation makes it possible to obtain a reduction in surface water temperature of more than 2°C, and therefore to maintain a surface water temperature below the critical threshold of 26°C, favouring the occurrence of hurricanes.

[53] It should be noted that in another variant not shown, this plant includes a seawater desalination module. This module is located near 5 conduits that supply it with seawater to be desalinated and is connected to supply channel 11 by these buried power lines.

[54] Figure 4, for its part, is a very schematic and cross-sectional representation of a 1' coastal installation for the management of meteorological phenomena according to the invention.

[55] It should be noted that for the description of Figure 4, the same references will be used to designate the same elements.

[56] Thus, the 1' installation includes:

- Ducts 5 start from said facility 1 and extend towards the ocean S.
- 7 pumps to pump water.
- Dispersion means 9 for dispersing the pumped water, which allows this pumped water to be mixed with the surface water.
- Means of electrical supply intended to supply energy to pumps 7.

[57] However, unlike the installation described in Figures 1 to 3, installation 1' comprises at least one well 8 which is connected to pumps 7 by one or more pipes 7a and to pipes 5.

[58] Pipes 5, which are made by drilling, extend obliquely through the rock at the edge of the continental shelf until they open at a depth where the water has a temperature of less than or equal to 10°C (i.e. at a depth below the oceanic mixing layer).

[59] Seawater from the depths fills well 8 through a communicating vessel effect and through the ducts 5. The seawater from the depths is thus introduced into well 8 without expenditure of energy and is stored there until use.

[60] Pumps 7, as before, make it possible to pump cold water (from well 8) and disperse it in surface water using dispersion means 9, such as water cannons.

CLAIMS

[Claim 1] Coastal installation (1) for the management of meteorological phenomena, the installation mentioned (1) comprising:
- conduits (5) from said installation (1) and extending to the depths below the oceanic mixing layer;
- pumps (7) to pump water;
- means of dispersing (9) pumped water to mix this pumped water with ocean surface water;
- at least one well (8) which is connected, on the one hand, to the pumps (7) by one or more pipes (7a), and on the other hand, to the pipes (5);
Said at least one well (8), filling via the conduits (5), with water from under the oceanic mixing layer by a communicating silt effect, characterized by the fact that the conduits (5) are drilled and extend obliquely through the rock of one edge of the continental shelf until they open at a depth below the oceanic mixing layer.
[Claim 2] An installation according to claim 1, characterized by understanding means of power supply (11), such as photovoltaic panels (11a) and/or wind turbines (11b).
[Claim 3] The installation according to one of the preceding claims, characterised by its location on the coast or on the beach (P).

[Claim 4] An installation according to claim 2, characterized in that the means of power supply (11) are located at a distance from the means of dispersion (9) and are connected to the pumps (7) by buried power lines.

[Claim 5] Installation according to one of the claims

characterized by the fact that these pumps (7) are submersible and/or electric pumps, for example at depths between 1.5 and 4 meters.

Claim 6] Installation according to one of the preceding claims, characterized by the fact that said ducts (5) are laid on the seabed (F).

[Claim 7] Installation according to one of the preceding claims, characterized by the fact that one of the ends of the ducts (5) is at a depth of more than 70 meters.

[Claim 8] Installation according to one of the preceding claims, characterized by the fact that the means of dispersion (9) are water cannons.

[Claim 9] The installation according to one of the preceding claims, characterized by concrete foundations on which the means (9) for dispersing the pumped water are arranged.

[Claim 10]. Installation according to one of the preceding claims, characterized in that each of the ducts (5) and/or means of dispersion (9) is supplied by at least one pump (7).

[Claim 11] The installation according to one of the preceding claims, characterized by the composition of a seawater desalination module.

1/2

[Fig. 1]

Fig. 1

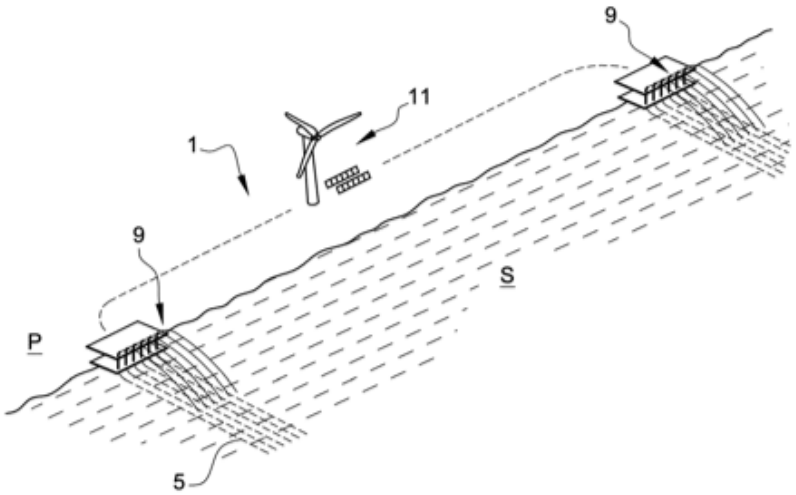

[Fig. 2]

Fig. 2

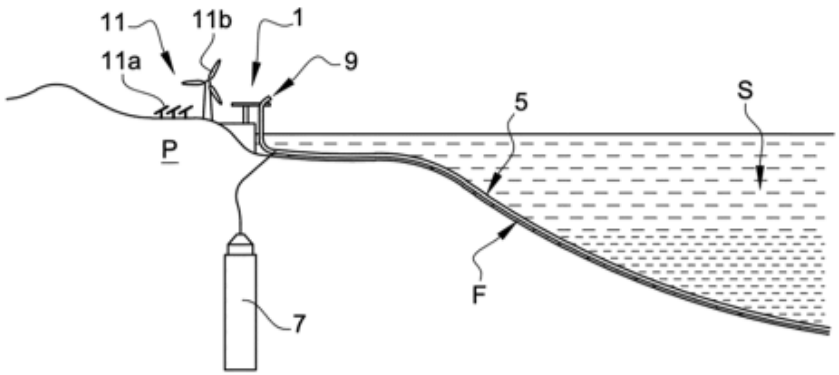

[Fig. 3]

Fig. 3

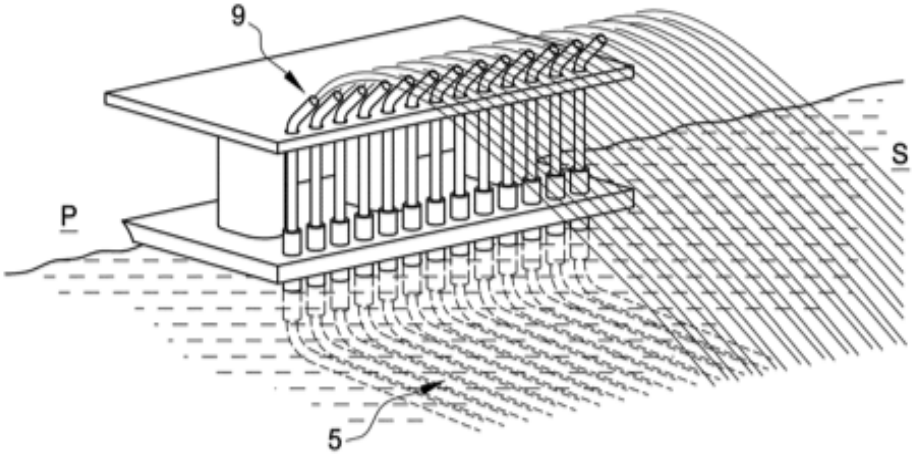

[Fig. 4]

Fig. 4

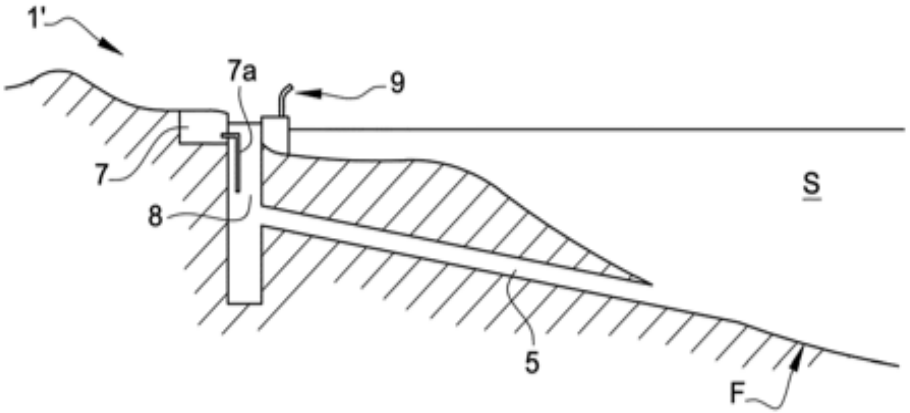

II - EFFICIENCY OF THE INDUSTRIAL UPWELLING PROCESS (ERAP)

1- To cool the surface waters of the ocean

example in Cape Verde, on the island of Boavista:

Calculation of the average temperature of the mixture of water masses M and m.

M, is the mass of water on the continental shelf around Boavista, e.g. at temperature t_1 = 30°C, then t_2 on day 2, then t_i after i days (i varies from 1 to 365). m, is the body of water raised daily by the IPU at temperature t (at depth -300 metres, t=10°C).

$t_2 = (Mt_1 + mt)/(M+m)$ which simplifies by fixing $x=m/M$ $t_2 = (t_1 + xt)/(1+x)$; x being very small, we can approximate the value 1/(1+x) by its limited expansion (complete formula on Wikipedia): 1/(1+ x)# 1-x. From where $t_2 = (t_1 + xt)(1-x)$ the squared term is negligible and the approximate formula becomes $t_2 = t_1 - x(t_1 - t)$. By an iterative calculation, we have $t_3 = t_2 - x(t_2 - t) = t_1 - 2x(t_1 - t)$ Neglecting the squared terms of x, we have $t_3 = t_1 - 2x(t_1 - t)$ And so on, the term of rank i becomes

$$\mathbf{t_i = t_1 - (i-1)\, x(t_1 - t)}$$

Digital application; i=365, t_1 =30, t=10 t_{365} =30-7280x

The values of x = m/M are retained, the average depth of the continental shelf on the island of Boavista for example is about 20 meters, its surface area is 600 km2 and the volume to be cooled is about 12 billion m^3. With 200 IPUs (15 submersible pumps with a flow rate of 100 m3/hour) or 10 submersible pumps with a flow rate of 150 m3/hour), a solar and wind operation of 20 hours per day m= 6 million m^3 of water at 10°C high and dispersed per day. It is x = 1/2000 and t_{365} = 30-7280/2000 or t_{365} = 26.36 degrees. This cooling of 3.64 degrees, applied to five Cape Verdean islands with a continental shelf, is enough to keep surface waters in the critical North Atlantic below the 26.5 degree threshold, a factor that triggers the process of hurricane formation. In the end, the installation of 200 IPUs on Boavista and a further 250 IPUs spread over the other four islands of Cape Verde with a continental shelf appear to be sufficient to reduce the number and frequency of hurricanes that originate in the Intertropical Convergence Zone located 600 nautical miles west of Cape Verde;

2-To cool the surface waters of the Pacific during periods of high presence of EL NINO,

for example on the Peruvian, Ecuadorian and Colombian coasts

The most significant temperature variations in the global climate system are caused by a natural cycle that occurs irregularly every two to seven years in the Pacific Ocean called ENSO (El Niño - Southern Oscillation). The first phenomenon, El Niño, the warm phase of ENSO, causes the global thermometer to rise and is caused by a weakening and/or reversal of the Pacific trade winds. And the second phenomenon, La Niña, the cold phase, causes cooling thanks to the Pacific winds returning to their usual direction from east to west. Warm waters on the Peruvian, Ecuadorian and Colombian coasts are pushed westwards and upwelling of cold waters occurs along these coasts. In English, this phenomenon is called UPWELLING.

By copying nature, man can therefore fight the global warming caused by El Niño. It is therefore necessary to pump, PUMP, **PUMP, phenomenal quantities of cold water between 10° and 15°C to a depth of 300 meters along these coasts in order to limit the warming of surface waters.** It is therefore necessary to dig every 400 meters over 2,000 km of coastline, and to install 5,000 wells **(5,000 PIU stations according to the invention)** with high-flow submersible pumps of 150 M3 per hour.

3-To cool surface waters in the Mediterranean

Example on the coast of the Côte d'Azur from Cannes to Menton

- Storm Alex, from September 30 to October 3, 2020, caused torrential rains with devastating and deadly floods in the three valleys of the Vésubie, Roya and Tinée. The 970-millibar depression, a remnant of an Atlantic tropical storm that crossed France from west to east, was blocked inland near Nice. By staying in place and rotating counterclockwise, the depression accumulated water vapor from the overly warm waters of the Mediterranean. We have seen on NASA maps that global warming in the Mediterranean is 3°C higher than its historical average. If we want to reduce the probability of these autumn storms returning, we need to cool the surface waters of this coastal area by 3°C because in August the sea exceeds 27°C off Cap d'Antibes and sometimes reaches 30°C on some beaches from Cannes to Menton.
- We therefore keep for the digital application ; i=365, t_1 =27, t=10 t_{365} =27-6552x
- The values of x = m/M kept on the stretch of coast from Cannes to Antibes, M the volume of water to be cooled by 3°C is about 600 million m3. An ERAP station consists of 15 pumps with a flow rate of 100 m3 or 10 pumps with a flow rate of 150 m3 per hour, which operate for 20 hours, it raises 30,000 m3 per day. To cool by 3°C, 9 PIUs must therefore rise m = 270,000 m3 of cold water to 10°C.
- We check t_{365} = 27-6552x = 27-6552*0.27/600= 2.95 °C.
- Extrapolating this result from Saint-Laurent du Var to Menton, 21 additional carbon sinks must be installed.
- Thus, with 30 PIU stations, an investment of around 30 million euros, surface water is cooled by 3°C, this emblematic coastal area of the Côte d'Azur is air-conditioned and 750,000 tonnes of CO2 are absorbed.

4 - Efficiency of the Industrial Upwelling Process (IUP) to cool the Persian Gulf

The Persian Gulf is an almost enclosed sea with an area of 251,000 km2 and a shallow depth, about 50 meters on average. It receives less water from the rivers in the region than it

loses during very high evaporation. Its salinity reaches 100 g of salt per liter and the surface temperature of the water reaches and even exceeds 32°C from May to October, with scorching temperatures exceeding 50°C. **And according to NASA, which has issued a worrying warning, several countries in the Persian Gulf will become uninhabitable in fifty years because their wet bulb index exceeds 35°C, which represents a deadly risk to human health.**

But it is possible to reduce the average temperature in this area by more than 2°C and to stabilize the temperature of the waters of the Gulf, in summer, to less than 30°C in a few years of operation of our industrial upwelling process, thus reducing the evaporation and salinity of this sea.

. To do this, we can envisage the creation of an artificial canal 10 metres wide and 10 metres deep and 4.5 km long, which crosses the Musandam peninsula on an east-west line, just opposite the island of Um al Ghanam. Taking advantage of the cold waters of about 10°C located at a depth of 226 meters east of the island of Abu Rashid in the Indian Ocean, this canal would have a flow of more than 500 m3 per second (about the same flow as the Seine in Paris). The use of centrifugal pumps of 150 m3 per hour, powered by solar panels and/or wind turbines, would cause a powerful upwelling (upwelling of cold water) on the western shore of the Persian Gulf, which would air condition the coasts of Oman, from the United Arab Emirates to Qatar and Bahrain, and beyond, to Saudi Arabia and Kuwait.

This would provide a volume of cold water at 10°C of about 36,000,000 m3 per day,

to cool the Persian Gulf and capture atmospheric CO2.

. For example, submersible pumps with a flow rate of 150 m3 per hour are used to discharge cold water at 10°C from this artificial channel to the Persian Gulf, i.e. a flow rate of

0.04167 m3 per second. To obtain a flow rate greater than 500 m3/s as for the Seine, it is therefore necessary to install 12,000 pumps and build a storage tank on the coast for this cold water, fed by tube pipes 14 m long and with an outer diameter of 32 inches (i.e. an internal diameter of 30 inches or 0.762 m) resting on the seabed. Each line is arranged over a distance of 8 NM. This requires 1058 tubes per line and 2500 lines. Every hour, 1,800,000 m3 at 10°C will be dumped on the coast and/or beach to cool the surface water to 32°C. We can expect 20 hours of operation per day, which will provide 36 million m3 per day.

- CO2 has a solubility of 2.318 g per kg of water at 10°C, whereas at **30°C only 1.257 g of atmospheric CO2 is dissolved per 1 kg of water.**

- For each kg of cold water discharged, the difference is 1.061 g of additional atmospheric CO2 absorbed. This represents 38,196 tonnes of CO2 absorbed per day and 13.94 million tonnes per year.

III - ATMOSPHERIC RIVERS IN THE SKY

Narrow corridors of water vapor that transport heat from the subtropics to Europe and the American West, For the North Atlantic, this extreme weather phenomenon, that of New Year's Eve 2022 with a weather alert and which brought torrential rains to Europe and in particular to the tip of Brittany, is nicknamed **Rum Express** because it comes from the West Indies and the Gulf of Mexico.

For the North Pacific, this same extreme weather phenomenon is called **the Pineapple Express**, which heavily waters California and originates in Hawaii.

. It should be noted that these narrow corridors of water vapor in the atmosphere follow the southwest-oriented corridors of the air routes serving these regions, the Caribbean - Europe on one side and the Hawaiian - California Islands on the other. We now know that the combustion of kerosene in reactors deposits at high altitudes in the lower stratosphere between 11 and 13 km not only CO2 but also water vapor and unburned particles that aggregate water vapor from the natural evaporation of the oceans (Hadley cells and Ferrel cells) of these subtropical zones.

. The atmospheric rivers resulting from the acceleration of the water cycle thus demonstrate, in another way, the need to calculate PARCEL, the Acceleration Power of Thermal Warming and/or Localized Water Vapor Runaway.

. If the cruising altitude of jet aircraft is limited to 8000 metres, there is less chance of atmospheric rivers forming and crossing the oceans.

IV- THE ENERGY TRANSITION

To fight against global warming

and reduce greenhouse gases

With the energy transition looming, lithium is (and will be) the metal that is increasingly sought after and used in very large quantities, and will undoubtedly be transported by air. We should be satisfied, in France we have lithium in three regions: in Alsace, in the Massif Central and in the Pyrenees. Mines begin extracting ore for research and analysis. And even a plant for the processing of this metal and its compounds will be built in Beauvoir (Allier) in the coming years. *The Imerys company plans to extract 34,000 tons of lithium hydroxide per year from 2028, for at least 25 years,* according to a press release at the end of October 2022.

For example, **lithium chloride forms a concentrated brine that can be aggregated with hydrogel according to an** MIT patent. The main property of this combination is to strongly absorb moisture from the atmosphere over a wide range of temperatures. Large-scale use of this lithium chloride brine, which can absorb more than ten times its mass of moisture, according to the MIT researchers, could provide water in any region of the world, even in the most arid regions. The brine, having absorbed water vapor from the atmosphere, can then be heated, condensed, and collected as ultrapure water for human needs.

We must not forget that the main greenhouse gas in the Earth's atmosphere is water vapor (12,700 billion tons in 2022), even if its lifespan is only a few days, before that of carbon dioxide (3,258 billion tons in 2022) with a lifespan of a century . If we look at the centenary variation between 1922 and 2022. According to a simple rule of three, depending on the increase in the average temperature on Earth (at +1°C corresponds to +7% more water vapor in the atmosphere), we can see that the mass of water vapor stored in the atmosphere in a century has increased by 939 billion tons (global warming of +1.14°C between 1922 and 2022). And the century-long increase in CO2 produced by human activities is only 759 billion tons.

Contributions (natural and anthropogenic)

to The greenhouse effect of the different gases

Natural water vapour **(water cycle)**, which is present in large quantities in the atmosphere, is responsible for **60% of the greenhouse effect**. The **water vapour (additional flow)** produced by human activities is considered by a large majority of scientists and climatologists to be negligible compared to **the huge average stock of natural origin already present in the atmosphere in 2022, which is on average 12,700 billion tonnes.**

Clouds are not included in this average mass of water vapour. As the lifetime of this gas in the atmosphere is too short (1 to 2 weeks), it is " *scientifically* " stated that it is not possible to calculate its global warming potential (GWP) over a period of 100 years, as is the case for other greenhouse gases. Without GWP, the water vapour produced annually by human activities, which is also a negligible quantity, is no longer considered to be responsible for uncontrollable climate change.

. **Carbon dioxide CO2 (GWP = 1 by definition**) is responsible for **26% of the greenhouse effect** , its lifespan is one century. **The current stock of CO2 is 3,258 billion** tonnes and human activities produce an annual flow of 36.4 billion tonnes in 2021 (40.9 billion tonnes in 2023), half of which is absorbed by natural carbon sinks (oceans, forests, photosynthesis, etc.). Only this carbon dioxide produced by the burning of fossil fuels is considered anthropogenic and responsible for global warming.

Water vapour would have no role to play in the origin of this phenomenon **AND YET IT ACCELERATES IT** from a certain threshold of increase in atmospheric temperature, which can be dated precisely to 1988.

Ozone O3 is responsible for **8% of the greenhouse effect (GWP = 310).**

Finally, methane CH4 (GWP = 23) and **nitrous oxide N2 O (GWP = 296**) are responsible for the **remaining 6%.**

V-LE PARCEL

Method for calculating the Accelerating Power of Global Warming and/or Localized Runaway Heat (PARCEL) of water vapor

The University of Bern, and it is the only university in the world, has published in its journal HORIZONS a major research result on the measurement of the amount **of water vapour locally over Bern, the other gas in the atmosphere whose contribution to the greenhouse effect is greater than that of CO2. Its researchers found that the evolution of the vapor content of water varies according to the atmospheric region .** ***There is an increase in water vapor in the troposphere and in the lower stratosphere and a decrease in the mesosphere*** **. And this result is valid for continental Europe .**

. With global warming, all climatologists have noted an **intensification of the water cycle, each increase in the average temperature of +1°C allows the atmosphere to store +7% more water vapour .** But a very large majority of scientists consider that water vapor is an essentially natural phenomenon, that water vapor produced by human activities is considered a negligible quantity and that only CO2 produced by the combustion of fossil fuels is responsible for global warming.

. By knowing the 2021-2022 stocks and the contributions of the two main greenhouse gases: average water vapour stock of 12,700 billion tonnes, contribution to the greenhouse effect of 60% and CO2 reserve of 3,258 billion tonnes, contribution of 26%, we can deduce the evolution of PARCEL for water vapour, An indicator that takes into account the increase

in temperature over 100 years. Built on the same principles as the GWP of CO2 by calculating the variations in water vapor and CO2 stocks over 100 years, starting in 1922.

The global temperature variation of the planet from 1922 to 2022 is +1.14°C. We simulate local warming of +1°C (IPCC target between 1.5 and 2°C), +2°C (continents) and then local warming of +3°C (Europe), +4°C (Alaska) and +5°C (Arctic and Siberia). **The PARCEL corresponds to the ratio of the changes in the stock by the contributions of the two gases by assigning a PARCEL=1 to CO2, a gas taken as a reference for the calculation of the carbon equivalent of the various greenhouse gases. (Table of results 27).**

. For PARCEL 2023, we have to calculate the centenary variation in CO2 since 1923. We take 99% of the centenary variation of 2022, to which we add half of the emissions of 2023, i.e. 40.9:2=20.45 billion tonnes, i.e. the following operation (0.99*759+20.45), i.e. 771.86 billion tonnes of CO2 variation between 1923 and 2023.

THE PARCEL continuation and the end of the calculation hypotheses

The mass of the CO2 stock in 1922 is equal to 2499 billion tons

(3258*(417-97,16) /417) we deduce the **centenary variation of CO2 759 billion T between 1922 and 2022.**

. Variation of the water vapour stock between 1922 and 2022, **simulation** of temperature variation over a century of +1°C or 7% additional water vapour, we deduce the **mass of water vapour in 1922 equal to 11,869 billion tonnes** (12700/1.07) and a **centenary variation of water vapour of 831 billion** tonnes.

. Variation in water vapor stocks between 1922 and 2022, **REAL SITUATION** of temperature variation in a century of **+1.14°C or 7.98% additional water vapor** , we deduct the mass of water vapor in 1922 equal to 11,761 billion tons (12,700/1.0798) and a **centenary variation of water vapor of 939.4 billion tons.**

. Variation of the water vapor stock between 1923 and 2023, **REAL SITUATION** of temperature variation of +0.28°C compared to 2022, we deduct the **additional mass of water vapor in 2023 of 230.7 billion tons** (rule of three 939.4*0.28/1.14= 230.7) and the **centenary variation of water vapor is 939.4+230.7= 1170 billion T.**

. Variation of the water vapor stock between 1922 and 2022, **simulation** of temperature variation over a century of **+2 °C or 14.49% additional water vapor** , we deduce the mass of water vapor in 2022 equal to 13,589 billion tons (11,869*1.1449) and a **centenary variation of water vapor of 1,720 billion tons.**

. Variation of the stock of water vapor between 1922 and 2022, **simulation** of temperature variation over a century of **+3°C or 22.5% additional water vapor** , we deduce the mass of water vapor in 2022 equal to 14540 billion tons (11869*1.225) and a **centenary variation of water vapor of 2951 billion tons.**

. Variation of the water vapor stock between 1922 and 2022, **simulation** of temperature variation over a century of **+4°C or 31.08% additional water vapor** , we deduct the mass of water vapor in 2022 equal to 15558 billion tons (11869*1.3108) and a **centenary variation of water vapor of 3689 billion tons.**

. Variation of the water vapor stock between 1922 and 2022, **simulation** of temperature variation over a century of **+5°C or 40.25% additional water vapor** , we deduce the mass of water vapor in 2022 equal to 16646 billion tons (11869*1.4025) and a **centenary variation of water vapor of 4777 billion tons.**

The PARCEL Results Table

We note:

-1) for **+1°C PARCEL (H2O) = 2.53 (** 831*0.6/ (759*0.26) = 2.526

-2) for **+1.14°C PARCEL real 2022 (H2O) = 2.85(939*0.6/ (759*0.26) = 2.8549**

-3) for **+1.42°C PARCEL real 2023 (H2O) = 3.5(1170*0.6/771.86*0.26) = 3.4980**

-4) for **+2°C PARCEL (H2O) = 5.23 (** 1720*0.6/759*0.26 = 5.2295

-5) for **+3°C PARCEL (H2O) = 8.97** (2951*0.6/759*0.26) = 8.9723

-6) for **+4°C PARCEL (H2O) = 11.21 (** 3688°0.6/ (759*0.26) = 11.2131

-7) For **+5°C PARCEL (H2O) = 14.52** (4777°0.6/ (759*0.26) = 14.5241

A PARCEL varies parabolically from 2.53 to 14.52 depending on the increase in atmospheric temperature. We will keep an average simulation PARCEL between +2°C and +5°C of 10 (average of lines 4, 5, 6 and 7)

PARCEL Simulation Mean (H2O) #10

VI - DEHYDRATION OF THE ATMOSPHERE,

thanks to *global air transport*

The current trajectory of the energy transition in air transport focuses solely on decarbonisation by eliminating the use of fossil kerosene as much as possible. On February 21, 2024, Airbus and TotalEnergies signed a strategic partnership to develop green aviation fuels (SAF and e-kerosene). But the combustion of 1 kg of kerosene in a jet engine produces 3.84 kg of carbon dioxide (CO_2) as well as 1.25 kg of water vapour. Using green fuel reduces the carbon footprint, but burning 1 kg of e-kerosene will still produce 1.25 kg of water vapor. And airplane contrails will remain in the atmosphere. If we can reverse priorities through innovation and also reduce the mass of water vapor in the atmosphere, it will be easier to control and contain global warming.

MIT's research shows great promise with the combination of the hydrogel with lithium chloride. If Airbus engineers could patent a system that could quickly attach small aerodynamic containers of thin thickness between 15 and 20 cm, evenly distributed above the fuselage and containing this mixture in contact with atmospheric air. For example, during a Paris-Nice flight, if the consumption is about 3200 kg of kerosene, 4000 kg of water vapor is also

injected into the lower stratosphere. It would be enough to take 400 kg of magic potion, hydrogel plus lithium chloride, to Paris to recover 4000 kg of atmospheric water vapor that we disembark in Nice, i.e. a neutral balance of the flight for this greenhouse gas. It should be noted, paradoxically, that the weight of the aircraft at landing is 400 kg higher than that at take-off. On a long-haul flight that often takes off at the maximum weight allowed to carry the maximum payload, it will be necessary to make a compromise and limit the magic potion by carrying only 1000 to 2000 kg, for example by reducing the payload accordingly. On arrival, there will be an additional weight of 10,000 to 20,000 kg of water and it will be necessary to check that the fuel consumption will be sufficient to comply with the maximum landing weight.

VII-SUMMARY: THE CLIMATE EMERGENCY REQUIRES A REVERSAL OF PRIORITIES

A famous Ecole Polytechnique graduate on all television sets calls for a halt to all air flights to save the planet, with only four flights per life. But AIRLINE PILOTS have the opportunity to put an end to the unbearable climate change that our planet is experiencing year after year without stopping air travel.

MIT, the Massachusetts Institute of Technology, a research university in Cambridge located near Boston, has set a timeline in 2023 to **achieve the goals of sustainable aviation by 2030.** There are five years left to chart a new future for aviation. (You can see the study done on https://report.aiazero.org/). Indeed, they identified that the impact on the global climate of stratospheric aviation trails is **an accelerator of global warming** .

And it is urgent to consider this acceleration of global warming as a priority without going through decarbonization with SAF fuels. There is a reversal of priorities: first, we deal with the influence of the first greenhouse gas, water vapour, and, secondly, carbon dioxide.

In France and Europe, climate change is on a trend of +3 to +4°C by 2030. And the government has published the PNACC-3 to adapt to a warming of +4°C by 2100.

As early as 2019, I also identified that Global Air Transport is the cause of the climate change we are currently experiencing. In August 2019, I filed a patent with the INPI to fight against global warming and excess water vapor. **The title of my invention is: Coastal Facility for the Management of Meteorological Phenomena.** On April 21, 2023, the INPI recognized the accuracy of my work and granted me the national certificate. On April 3, 2024, it was the turn of the European Patent Office in Munich to recognize my work and I was granted a unique European patent.

A direct reading of NASA's hemispheric temperature records shows linear variations at the onset of global warming, and then, since 1992, differential variations in temperatures in the Northern Hemisphere relative to the Southern Hemisphere. In mathematics, a linear variation is the same as solving an equation with an unknown and for a differential variation, you have to solve a differential equation with two unknowns.

Thus, we see:

- on the one hand, that the greenhouse gas CO2 is the main cause of the initial and linear global warming (unknown CR) of the two hemispheres. This has been visible since 1967 on the NASA/GISS/GISTEMP v4 temperature curve.
- and on the other hand, the greenhouse gas solely responsible for runaway climate change (unknown EC) is none other than water vapour. What we can see on the same curve is that the runaway climate began in 1992. And this is confirmed by the MIT publication of April 2023.

I have proposed a calculation of the water vapor PARCEL (Acceleration power of global warming and/or localized runaway) as a function of the temperature variation:

Var T +1°C. +2°C +3°C. +4°C. +5°C

PARCEL 2.53 5.23 8.97 11.21 14.52

PARCEL simulation average equal to 10 between 2 and 5°C.

According to some data from 2022, it was calculated that 12,700 billion tons of water vapor were suspended in the atmosphere, which represents a positive temperature variation of 1.21°C compared to the late 19th and early 20th centuries.

In 2023, this temperature rose to 1.36°C and an additional 133.4 billion tonnes of water vapour accumulated in the atmosphere. In 2024, the hottest year of the century, the thermometer reached 1.57°C and the atmosphere stored 195.5 billion tons of additional water vapor.

In summary, for the two main greenhouse gases, in billions of tonnes in the atmosphere, we find:

Water vapor H2O/CO2 carbon dioxide (in Billion tons)

Greenhouse effect 60% /26% = 2.308

2022 > 12,700 /3258 = 3,898

2023 > + 133.4 /36.8 = 3.625

2024 > + 195.5 /37.4 = 5.227

The acceleration in 2024 is phenomenal and, in the mass ratio, the additional annual mass of water vapor suspended in the atmosphere is more than 5 times that of CO2.

Extreme weather events in 2024 :

Dry since 1970, the re-irrigation of Lake Iriqui in southern Morocco by torrential rains in the Sahara.

The abundance of snow in Saudi Arabia's Al-Jawf desert has raised questions among climate scientists.

Climate bombs devastated the northwest of the American continent in November.

Closer to home, the cold air masses at altitude in France and especially in Spain, with torrential rains and torrents of mud, have spread terror among the population by destroying everything, cities, roads and bridges. We should no longer consider that water vapor is a natural phenomenon and does not influence the climate .

Decarbonizing human activities a little is necessary but it is no longer enough, we need to dehydrate a LOT and it is much easier and, above all, by far the least expensive.

In detail and according to the readings on the NASA temperature curve (see graph below), we note: The reference period being 1951-1980, we see that over 41 years, from 1880 to 1921, the southern hemisphere is slightly less cold than the northern hemisphere, the coldest year being 1916 with a temperature difference of -0.6°C.

Then, over 46 years, from 1920 to 1966, we observe the beginning of global warming in the Northern Hemisphere with a negative difference until 1930, then the difference becomes slightly positive on average until 1966, the year of the end of air transport with propeller planes and the beginning of jet planes.

From 1967 to 1990, global warming began to be visible, with a difference between 0.2°C and 0.6°C, with the hottest year being 1990. In addition, we can see that the southern hemisphere is slightly warmer than the northern hemisphere.

While the temperature difference in the southern hemisphere follows the same gentle linear slope, with the difference going from 0°C in 1970 to 0.6°C in 2022. This represents a temperature increase of 0.1154°C every 10 years. Both hemispheres have the same carbon dioxide (CO2) content. If this greenhouse gas were the sole cause of global warming, the two hemispheres would on average have about the same climate change as between 1880 and 1990 over the space of 110 years. We can therefore deduce that global warming in the southern hemisphere is essentially of carbon dioxide or CO2 origin.

On the other hand, from 1992 onwards, the temperature difference in the Northern Hemisphere exploded from 0.2°C to 1.44°C in 31 years, i.e. a crazy slope of 0.4° every 10 years . global warming in the northern hemisphere is currently accelerating by 3.5 times that of the southern hemisphere, which will give a temperature difference of between +5.25°C and +7°C for a

temperate country like France in 2100. This is a far cry from the PNACC-3 (National Plan for Adaptation to Climate Change) and its 51 measures to adapt to +4°C. We must face reality: the other greenhouse gas solely responsible for runaway climate change is none other than **the water vapor injected by man into the lower stratosphere.**

It was the explosion of the underwater volcano HUNGA TONGA, which propelled 140 million tons of water vapor into the stratosphere of the southern hemisphere on January 15, 2022, that revealed this extremely violent climatic event. In 2023, the Southern Hemisphere warmed by 0.23°C, 20 times more than its historical average.

Human activities generate CO2 through the use of fossil fuels such as coal, oil or gas and are identical in both hemispheres. The only human activity that deposits water vapor, 300 million tons between 9 and 13 km altitude in the lower stratosphere, is World Air Transport, and the very significant proportion is **93% of flights in the Northern Hemisphere and only 7% of flights in the Southern Hemisphere.**

Every year in the northern hemisphere, the deposition of water vapour from high-altitude jet aircraft is more than double that injected by the explosion of the HUNGA TONGA.

The only solution to make this water vapor climate neutral is to absolutely limit the level of global air cruising to less than 8000 meters.

It should be noted that Regional Air Transport, which uses ATR 42 or 72 turboprop aircraft, with a ceiling of precisely 7,600 meters, does not contribute to climate change and that their low-altitude water vapor emission is completely neutral, as is the case for the cooling of nuclear power plants.
Further evidence of the dramatic influence of air travel water vapor on climate has been noted.

During the covid-19 outbreak from December 2019 to December 2020, global air travel was completely paralyzed and NASA temperature records over the Arctic show an average temperature drop of more than 2 degrees. Similarly, surveys of Arctic ice extent at the nsidc.org site show that this ice extent melted significantly from 2016 to 2020 and that since 2021, this ice extent has reformed due to the fact that global air transport does not fly over the Arctic Ocean. Note that with the war in Ukraine, flying over the Arctic Ocean is prohibited.

In Antarctica in 2021, the extent of the ice remains within the average observed from 2011 to 2020. In 2022, following the explosion of the Hunga Tonga submarine volcano, we are witnessing an accelerated melting of the ice sheet with a record low in 2023. In 2024, the amount of water vapour in the upper atmosphere is lower because it is evacuated over time, and the ice in the Antarctic ice sheet is reforming.

According to the studies on the state of the Alpine glaciers carried out by the University of Zurich at the Glamos.ch site , during the Covid-19 epidemic and the closure of air

transport, it can be seen that in 2019 the melting of the Alpine glaciers was significantly reduced and, above all, that in 2020 the melting of the Alpine glaciers practically stopped. To address the ozone hole in the upper atmosphere observed by scientists since 1970, twenty-four countries and the UNECE signed the Montreal Protocol in 1987. The text banned the use of chlorofluorocarbons (CFCs), which are used as refrigerants, solvents and propellants in spraying. Forty years later, every country in the world has ratified the agreement, and the ozone layer that protects the planet is recovering. We have a similar problem to solve.

We must realize that the NCAP-3 is insufficient. As soon as the cause of uncontrolled climate change is definitively identified, it is imperative to lower the cruising altitude of aircraft below 8,000 meters in order to save the Alpine glaciers, the poles and the high seas at the United Nations COP 30 (Conference of the Parties) in Belém in November 2025.

To achieve this, in the Europe and Middle East area, including the glaciers of the Alps and the Mediterranean Sea, which are overheating at an accelerated rate of +3° to +4°C, the national airline AIR FRANCE and its AIRLINE PILOTS must propose and install an experimental laboratory as suggested by MIT as soon as possible from *the cruising* level *limitation to less than 8000 meters* . No water vapour in the stratosphere would therefore be possible in Europe from 2027 and then in the rest of the world, in order to achieve the objectives of sustainable aviation by 2030.

And furthermore, we need to keep a cool head and limit future air travel growth to between 1 and 2%, with 4.5 billion passengers in 2019 and a forecast of 9 billion in 2050 in 25 years – this is unsustainable for the planet.

And subsequently, by 2050, some of the countries listed in my study will have to implement this European unitary patent to fight against water vapour and residual global warming, in order to maintain the bearable temperature difference set in Paris by COP 21 in 2015 between 1.5° and 2°C in 2100.

Hoping that we have convinced many people of the importance of fighting stratospheric water vapor, we can continue to fly our beautiful machines without shame and satisfy our passengers' desire to travel.

Gino SCATOLIN, CDB AF retired

Patent https://www.piufortavi.com/ website

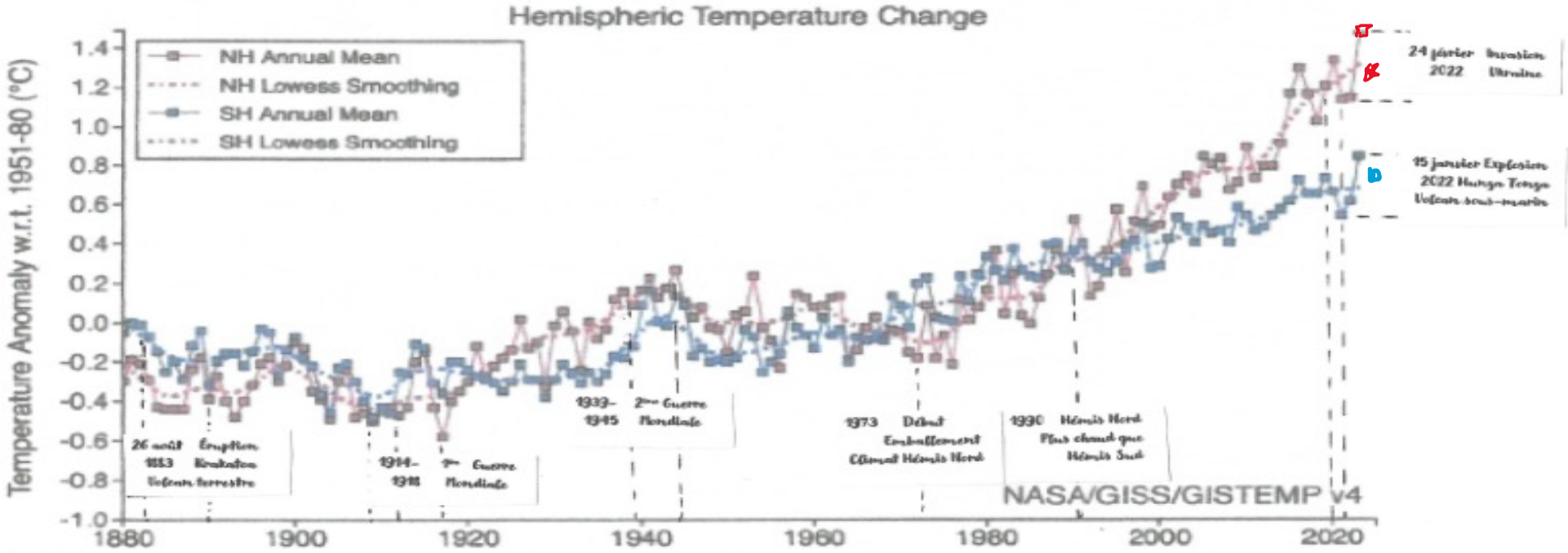

Annual and five-year lowess smooth anomalies (vs. 1951-1980) separately for the Northern and Southern Hemispheres based on land and ocean data.

Figure also available as a PNG, PDF, HTML, plain text and CSV (data columns 2, 3), or Generate PNG of the visualization's current state.

Global Monthly Mean Surface Temperature Change

Annual Mean Temperature Change in the United States

Seasonal Mean Temperature Change

Northern and Southern Hemisphere Temperatures NASA Archives

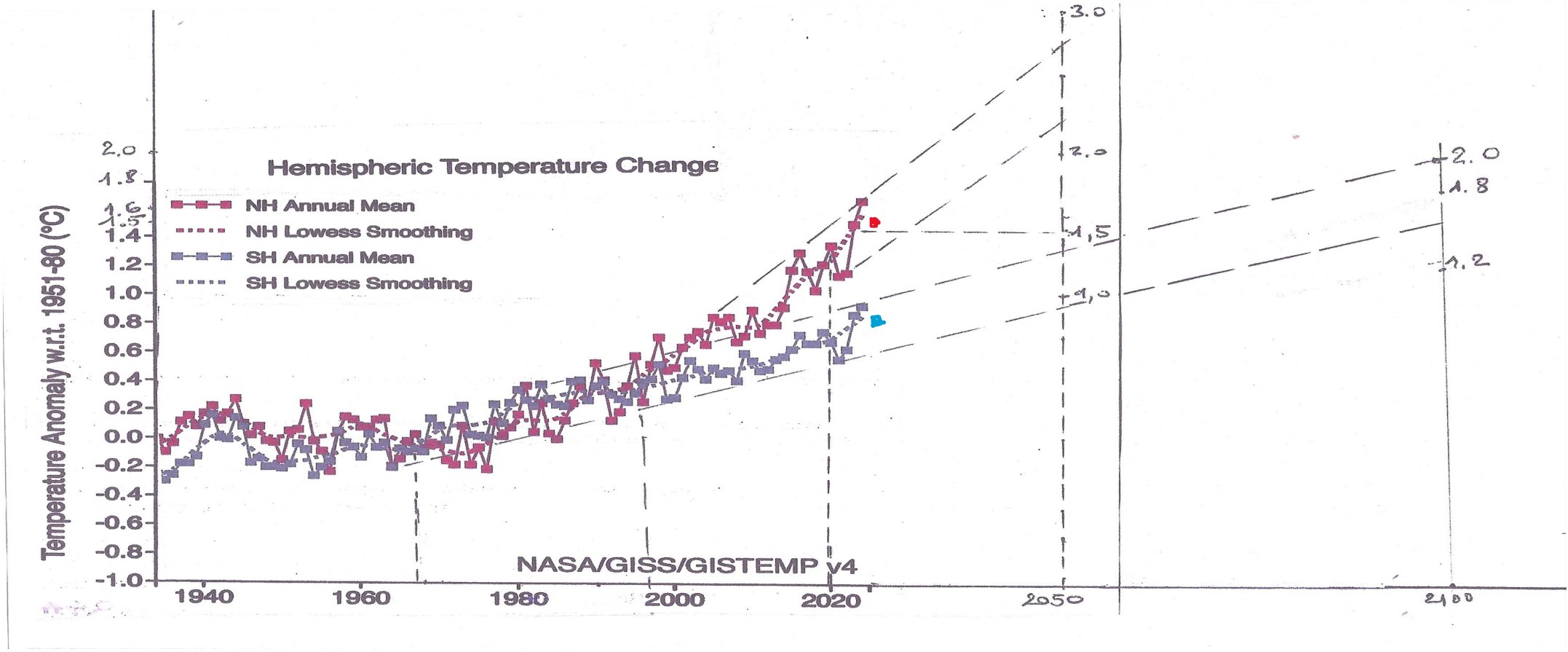

Temperature projections for 2050 and 2100 in both hemispheres

If we don't stop runaway climate change

Northern Hemisphere climate runaway from 2005 to 2025

Notes

From the annual low of 10.150 million km2 in 2020, Arctic sea ice is recovering in 2021 following the cessation of water vapor deposition produced by the non-overflight of the Arctic Ocean by World Air Transport to serve the Far East after the covid-19 pandemic. But the outbreak of the war in Ukraine in February 2022 is once again worsening the melting of Arctic sea ice.

In 2023 and 2024, its extent has returned to its 2007 and 2012 values. The year 2025 does not seem likely to increase its extent, but a stabilization around 10.35 million km2 (2018 value) is very likely.

Arctic sea ice extent MKm2

	January	February	March	April	May	June	July	August	Septe	Octob	Novem	Decem		Yearly
2005	13,661	14,373	14,687	14,09	12,911	11,162	8,649	6,301	5,504	7,352	10,22	12,228		10,907
2006	13,466	14,325	14,421	13,906	12,517	10,92	8,46	6,496	5,862	7,541	9,659	11,955		10,773
2007	13,703	14,513	14,542	13,845	12,78	11,22	7,943	5,342	4,267	6,04	9,76	12,034		10,474
2008	13,887	14,953	15,179	14,352	12,974	11,208	8,678	5,913	4,687	7,35	10,34	12,359		10,978
2009	13,914	14,812	14,984	14,496	13,187	11,32	8,465	6,136	5,262	6,92	9,772	12,2		10,932
2010	13,739	14,581	15,137	14,659	12,866	10,585	8,075	5,875	4,865	6,984	9,614	11,831		10,711
2011	13,464	14,363	14,546	14,108	12,681	10,749	7,724	5,503	4,561	6,465	9,772	12,154		10,483
2012	13,729	14,553	15,196	14,626	13,012	10,674	7,672	4,723	3,566	5,886	9,388	12,006		10,406
2013	13,703	14,723	15,032	14,299	12,997	11,36	8,132	6,014	5,208	7,455	9,939	12,184		10,897
2014	13,648	14,418	14,758	14,088	12,701	11,033	8,108	6,078	5,22	7,232	10,12	12,353		10,79
2015	13,602	14,401	14,37	13,893	12,468	10,879	8,378	5,599	4,616	6,966	9,846	12,045		10,566
2016	13,457	14,203	14,4	13,681	11,924	10,413	7,938	5,371	4,528	6,082	8,658	11,459		10,163
2017	13,19	14,12	14,29	13,753	12,631	10,756	7,939	5,481	4,822	6,767	9,493	11,743		10,393
2018	13,077	13,967	14,298	13,696	12,232	10,778	8,268	5,615	4,785	6,134	9,823	11,862		10,355
2019	13,567	14,394	14,574	13,434	12,186	10,594	7,589	5,026	4,364	5,735	9,353	11,903		10,201
2020	13,636	14,642	14,73	13,621	12,343	10,593	7,294	5,07	4,001	5,334	8,985	11,729		10,15
2021	13,501	14,39	14,658	13,792	12,682	10,765	7,647	5,715	4,952	6,816	9,83	12,152		10,552
2022	13,872	14,612	14,586	13,986	12,879	10,875	8,287	5,95	4,897	6,657	9,725	11,892		10,661
2023	13,364	14,189	14,43	13,924	12,822	10,987	8,207	5,514	4,381	6,412	9,682	11,978		10,469
2024	13,917	14,607	14,868	14,041	12,735	10,854	7,87	5,13	4,351	5,934	9,146	11,408		10,391
2025	13,11	13,745	14,119	13,829	12,494	10,405	7,66	5,413	4,747	6,317	8,775	11,222		10,13
2026	13,107	14,098	14,131	13,568	12,14	10,422	7,714	5,561	4,811					

Sudden warming in Antarctica in 2022,

Notes

Before 2021, there are fluctuations in the extent of Antarctic sea ice around 11.5 million km2. Since the explosion of the Hunga Tonga submarine volcano, the area has fallen by more than one million km2 (-7.5% in 2022, -15% in 2023). A very marked warming of the southern hemisphere has occurred.

This is not due to CO2 from burning fossil fuels, but to the 140 million tons of water vapor propelled into the stratosphere.

The sea ice is reconstituted in 2024 and 2025, it will take more than four years for the stratospheric water vapor to be evacuated thanks to the polar vortex.

We can deduce that the lifetime of water vapor in the stratosphere is more than 1500 DAYS and not 10 DAYS as in the lower troposphere.

Antarctic sea ice extent MKm2

	January	February	March	April	May	June	July	August	Septem	Octob	Novem	Decem		Yearly
2005	4,752	2,97	4,082	7,032	10,29	13,291	16,158	17,922	18,805	18,477	16,316	9,68		11,695
2006	4,164	2,651	3,215	6,01	9,456	13,345	16,114	18,098	19,094	18,733	16,23	9,854		11,461
2007	4,673	2,905	3,835	6,418	9,648	13,287	15,956	17,682	18,861	18,508	15,892	11,98		11,687
2008	6,414	3,895	5,284	8,242	11,05	14,062	16,095	17,645	18,145	17,994	16,248	11,51		12,239
2009	5,707	2,991	4,441	7,798	10,93	13,908	16,261	18,098	18,96	18,298	15,848	10,74		12,049
2010	4,958	3,106	3,847	6,715	10,64	14,41	16,921	18,607	18,799	18,648	16,755	11,27		12,107
2011	4,512	2,519	3,368	6,097	10,09	13,333	15,752	17,805	18,739	18,218	15,757	11,2		11,501
2012	5,654	3,553	4,55	7,309	10,46	13,547	16,298	18,097	19,208	18,594	16,11	10,39		12,004
2013	5,543	3,836	5,017	7,623	10,92	14,155	16,809	18,664	19,389	19,018	16,872	11,85		12,524
2014	6,327	3,843	4,901	8,343	11,52	14,687	17,106	18,908	19,756	19,003	16,388	11,93		12,776
2015	6,852	3,799	4,964	8,373	11,72	14,475	16,775	17,749	18,444	18,409	16,175	10,66		12,414
2016	4,689	2,79	4,069	7,222	10,1	13,242	16,024	17,892	18,15	17,46	14,223	8,279		11,202
2017	3,784	2,288	2,699	5,436	9,014	12,409	15,297	17,219	17,906	17,776	15,113	9,482		10,749
2018	4,211	2,326	3,54	6,033	9,321	12,885	15,7	17,417	17,961	17,732	15,102	9,188		11
2019	3,868	2,655	3,169	5,718	8,852	12,251	15,302	17,478	18,335	17,937	14,995	9,409		10,876
2020	4,598	2,92	4,003	6,662	9,871	13,275	15,721	17,758	18,838	18,493	16,231	10,58		11,602
2021	4,777	2,892	4,484	7,132	10,4	13,542	16,452	18,194	18,509	17,689	15,042	9,245		11,579
2022	3,935	2,213	2,859	5,948	9,418	12,218	14,986	17,05	18,062	17,474	15,159	8,839		10,726
2023	3,296	1,978	2,838	5,538	8,447	11,115	13,566	15,575	16,891	16,278	14,378	8,765		9,931
2024	4,047	2,187	3,221	6,253	9,363	11,848	14,201	16,414	17,154	16,65	14,312	9,593		10,461
2025	4,693	2,218	3,002	6,173	9,273	12,114	14,665	16,502	17,636	16,965	14,576	9,218		10,663
2026	4,492	2,912	3,568	6,178	9,345	12,332	15,013	16,463	17,322					